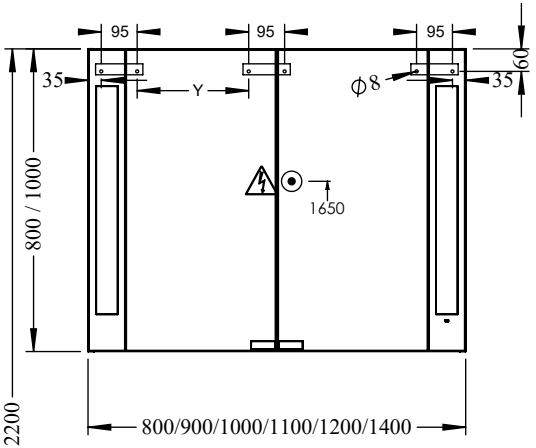

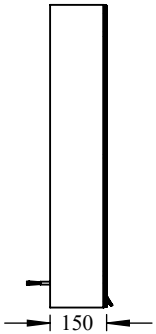

Schrankbreite	Y
800	-
900	-
1000	-
1100	-
1200	395
1400	495

SPNH080, SPNH090, SPNH100, SPNH110, SPNH120, SPNH140
SPOD080, SPOD090, SPOD100, SPOD110, SPOD120, SPOD140
SPNM080, SPNM090, SPNM100, SPNM110, SPNM120, SPNM140
SPOI080, SPOI090, SPOI100, SPOI110, SPOI120, SPOI140

+/- 0